SUNSTAR传感与控制 http://www.sensor-ic.com/ TEL:0755-83376549 FAX:0755-83376182 E-MAIL:szss20@163.com

Catheter

Features: Ultra small temperature sensor with high response speed.

⑬Fμ Sensor

Ultra Small

Unit: mm

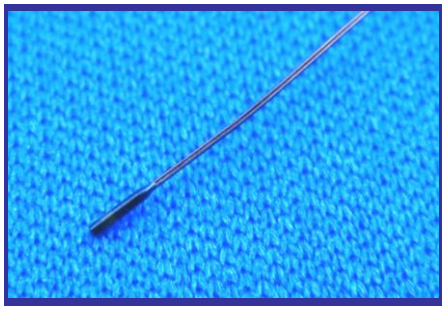

Zero Power Resistance : R_{37} = 14.054kΩ±0.5%
B value : $B_{0/50}$ = 3454 K ±1%
Temperature range : -10℃ - 70℃

◆Thermal Time Constant: approx. 0.07 sec. (in water)

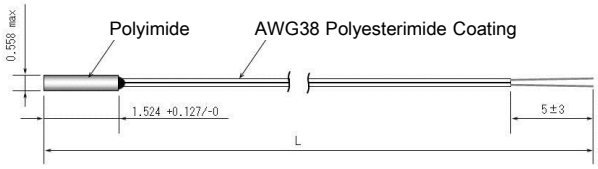

Thermometer / Ear Thermometer

⑭503ET-3H87U

High Accuracy

Features: Small and highly accurate sensor optimized for body temperature measurement.

Unit: mm

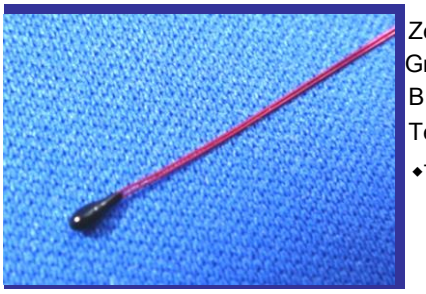

Zero Power Resistance : R_{37} = 29.614 - 30.264kΩ
Group temp. tolerance : R_{37}±0.05% / Group
B value : $B_{32/41}$ = 3943 K ±0.5%
Temperature range : -40℃ - 100℃

◆Thermal Time Constant: approx. 5.0 sec.

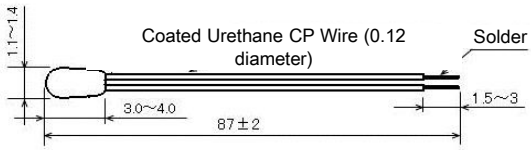

●R_{37} Group (A - U)

Group	R37 (kΩ) Min/Center/Max	Group	R37 (kΩ) Min/Center/Max
A	29.614/29.629/29.644	B	29.645/29.660/29.675
C	29.676/29.691/29.706	D	29.707/29.722/29.737
⋮		⋮	
S	30.172/30.187/30.202	T	30.203/30.218/30.233
U	30.234/30.249/30.264		

⑮FT-ZM

High Speed

Features: Small temperature sensor with high response speed optimized for measuring surface temperatures.

Unit: mm

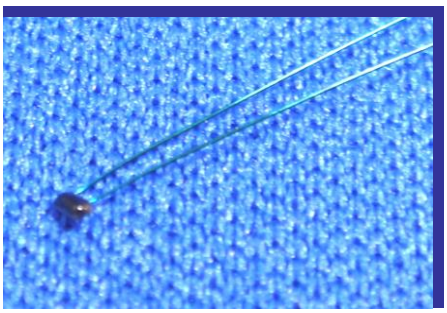

Zero Power Resistance: R_{25} = 50.00kΩ±5%
B value : $B_{25/85}$ = 3435 K ±1%
Temperature range : -10℃ - 100℃

◆Thermal Time Constant: approx. 1.5 sec.

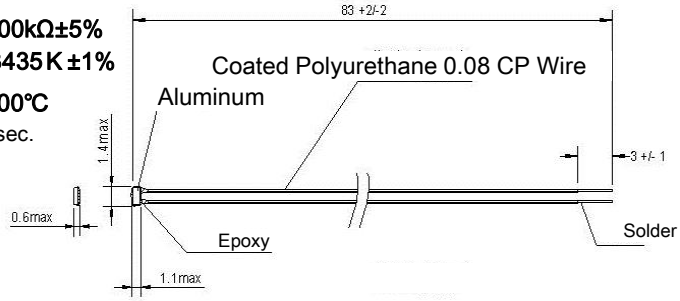

⑯Thermopile

Non Contact

Features: Non contact temperature sensor using infrared measuring

Unit: mm

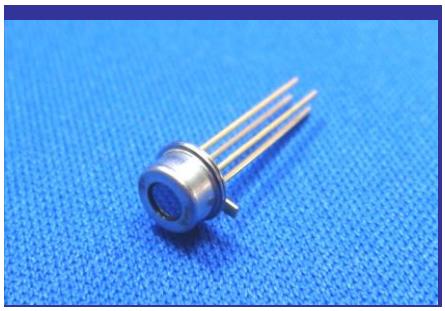

Output Voltage : 1.00±30mV
Thermistor Resistance: R25 = 100 k Ω±3%
Thermistor B value : 3435K±0.7%
Temperature range : -20℃ - 100℃

◆Thermal Time Constant: approx. 15ms
◆Angle : ±50deg.
◆Transparent wavelength band: Cut on 5μm

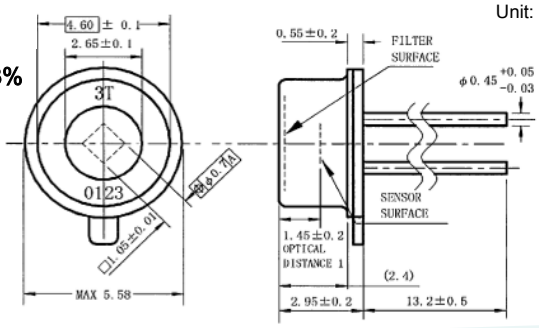

SUNSTAR传感与控制 http://www.sensor-ic.com/ TEL:0755-83376549 FAX:0755-83376182 E-MAIL:szss20@163.com